25
YEAR
WARRANTY

YOU'LL RETIRE BEFORE IT DOES

Smith & Loveless Inc.

Issue #04-06-812

EVERLAST™

with RAPIDJACK™ inside

It's a whole new world. Smith & Loveless is consolidating our entire above grade pumping line into one, the **EVERLAST™**. The **EVERLAST™** features the optional **RAPIDJACK™** check valve which extends the Smith & Loveless clog fighting offering package. See page 25 for more on **RAPIDJACK™**

Smith & Loveless Inc.

Table of Contents

Description	Page No.
In-Stock Control Panels: Above Grade	2
In-Stock Control Panels: Below Grade	3
Vacuum Pumps and Repair Kits	4
Compare for Yourself - 2-Way Vs 3-Way Solenoid Valve	5
Maintenance Video Series	6
Controller Upgrades - **QUICKSMART™ w/ FORCE MAIN SYNC™**	7
The Electrode and Vacuum Dome Evoluion	8
ER Relay & Electrode Evolution	9
X-PELLER® Non-Clog Impeller	10
Flooded Suction Non-Clog Pump Impellers	11
Vacuum Primed Non-Clog Pump Impellers	12
Impeller Bolts	12
Determining Impeller Rotation	13
Bubbler Air Compressors	14
Underground Pump Station Humidistat & Dehumidifier	15
Spring-Loaded Non-Slamming Check Valves	16-17
Flooded Suction Pump Seal Filter	18
SONIC START® STREAMLINE™	19
Replacement Rotating Assemblies	20-21
How It Works: **I-SERIES™** Immersible Wastewater Pumps	22-23
Wafer Check Valves	24
RAPIDJACK™ Quick Clean Check Valve	25-28
Gaskets, Quad Rings, & Bolts	29
Combination Gauges	30
Volute Gaskets	30
Continuous Hinge and Hood Lift Assist Kit	31
Anode Test Box	32
Corrosion Blocker	32
Double Mechanical Seal Replacement Parts Kit	33
Pump Failure Alarm	33
Float Check Valve Spare Parts	34
Float Switches	35
Pump School Schedule	36
EVERLAST™ Baseplate conversion	37

Smith & Loveless, Inc.

Copyright 2017 Smith & Loveless, Inc. reserves all rights. No part of this catalog, or the catalog in its entirety, may be reproduced by any means, electronics, or otherwise, without explicit prior written authorization from Smith & Loveless, Inc.

Published by: After Market Division • Smith & Loveless, Inc. • 14040 Santa Fe Trail Drive • Lenexa, KS 66215-1234, USA • Ph: (913) 888-5201 • Fax: (913) 748-0106 • Toll Free: (800) 922-9048, Option 5.

In-Stock Control Panels

Smith & Loveless now offers a cost effective In-Stock Control Panel for Wet Well Mounted Pump Stations and Underground Pump Stations. Customers can get a significant price break when they buy this off-the-shelf control panel. Once we receive your order, we just install the starters and breakers for the horsepower and voltage you need.

The In-Stock Control Panel has no options and comes with everything seen under component description and ships within 2-4 weeks. For more information, contact your local Smith & Loveless Representative or contact the Smith & Loveless Retrofit Department. It's a way to save money and quickly upgrade your pump station's control panel.

Vacuum Primed Control Panels - On-Demand/Constant Prime

Every In-Stock Control Panel for Wet Well Mounted Pump Stations comes with **On-Demand/Constant Prime** operation. When the priming system is in "**On-Demand**" mode, it will operate only after a pump is called on to run and if it is not primed. Once primed, the pump will be allowed to run. In the "**Constant Prime**" mode, both pumps are kept primed continuously, and ready to start immediately when called to pump. A simple selector switch changes the pump station operation from one mode to the other.

NEMA 1
In-Stock Control Panel Sizes
NEMA or IEC Rated Starters

HP	VOLTAGE
5	208
5	230
5	460
7.5	208
7.5	230
7.5	460
10	208
10	230
10	460
15	230
15	460
20	460
25	460

NEMA 12
In-Stock Control Panel Sizes
NEMA or IEC Rated Starters

HP	VOLTAGE
15	208
20	208
20	230
25	208
25	230
30	208
30	230
30	460

COMPONENT DESCRIPTION

NEMA 1 Enclosure
Opening the front single door (unscrew/lift off) is not necessary to reach the starters, breakers & switches as there are cut outs so these appear through the door for easy access. Starters and breakers are NEMA or IEC rated.

or

NEMA 12 Enclosure
Two door front with hinges and handle allows easy access to starters, breakers & switches. All starters and breakers are NEMA or IEC rated.

Starters & Overload Coils for Pump Motors

Manual Reset Operators - *Turns starters on/off without opening the door*

Set of Environmental Controls - *heater, blower & GFI convenience outlet*

Blower Thermostat

Control Panel Heater - *mounted to back of control panel with internal Thermostat*

Circuit Breakers & Relays for Vacuum Pumps & Solenoids

SONIC START® Operating Modules

SONIC START® STREAMLINE™ Time Delay Relays

Switch to Operate Constant Prime/On Demand Priming System

Sequential Alternation with Manual Switch - *Sequentially alternates the pumps each time a pump starts.*

Float Switch Controls Circuit Breaker - *Off, Low Level, High Level, & High Water Alarm*

Running Time Meters

Pump Motor Circuit Breakers

Pump Motor Handle Locks for Circuit Breakers

H-O-A (Hand-Off-Auto) Switches

3 KVA Transformer Circuit Breaker

TO ORDER, CALL **1-800-922-9048**

NEW: Underground Controls

Flooded Suction Control Panels

Every panel will need an entrance tube of 36” minimum to fit down the tube. This control panel operates with float controls, no option for bubbler controls.

NEMA 1
In-Stock Control Panel Sizes
IEC Rated Starters

HP	VOLTAGE
5	208
5	230
5	460
7.5	208
7.5	230
7.5	460
10	208
10	230
10	460
15	230
15	460
20	460
25	460

COMPONENT DESCRIPTION

NEMA 1 Enclosure

Opening the continuous hinge single door enclosure is not necessary to reach the selector switches and run time meters as these are mounted through the door for easy access. The circuit breakers are UL rated and the pump motor starters are IEC rated.

Starters & Overload Coils for Pump Motors

Set of Environmental Controls - *lights, entrance switch, light switch, blower, GFI convenience outlet, & sump pump*

Sequential Alternation with Manual Switch - *Sequentially alternates the pumps each time a pump starts.*

Float Switch Controls Circuit Breaker - *Off, Low Level, High Level, & High Water Alarm*

Running Time Meters

Pump Motor Circuit Breakers

Pump Motor Handle Locks for Circuit Breakers

H-O-A (Hand-Off-Auto) Switches

Transformer Circuit Breaker

Dare to Compare

Compare Smith & Loveless' Vacuum Pump price to Grainger's price

$406 | **$570.19** | **$720**

8L29
Top End Single Piston Model

8L44
Standard Single
Piston Model

8L32
Rugged Dual Piston Model

Shown above, the PN: 8L29, is the top end Smith & Loveless Vacuum Pump for pump stations with 4" piping. The PN: 8L44 is the standard S&L Vacuum Pump for 4" piping. For pump stations with 6" piping, the rugged PN: 8L32 S&L Vacuum Pump is the way to go for dependability.

Vacuum Pump Single & Dual Piston

PART #	STATION PIPING SIZE	TYPE
8L29	4"	Top End, Single Piston
8L44	4"	Standard, Single Piston
8L32	6"	Rugged, Dual Piston

Smith & Loveless carries a repair kit for the 8L29 & 8L32 Vacuum Pumps and an array of repair parts for the 8L44 that can be ordered depending upon what the operator requires. See below for part numbers and part descriptions.

8L29 Single Piston Vacuum Pump Repair Kit

PART #	DESCRIPTION
8L29AB	Repair Kit
8L29A1	Inlet Filter

8L32 Dual Piston Vacuum Pump Repair Kit

PART #	DESCRIPTION
8L32-1	Repair Kit

TO ORDER, CALL **1-800-922-9048**

The Solenoids: Old vs New

3/32” Orifice
1L406E
Old Style 3-Way
Solenoid Valve

5/16” Orifice
H87A343A
New Style 2-Way
Solenoid Valve

From these comparison pictures seen at left, you can see why both Smith & Loveless’ Customer Service Team and Engineering Team recommends upgrading your solenoid valves to the new larger 5/16” orifice 2-Way Solenoid Valve. The new solenoid valve reduces routine maintenance and can reduce priming time by up to 40%. The new **SONIC START® STREAMLINE™** comes standard with the 2-way 5/16” diameter orifice solenoid valve. If you’re not quite ready to upgrade from electrode to the **SONIC START® STREAMLINE™** , then consider at least upgrading to the larger ported 2-way solenoid valve. A variety of upgrades are noted below.

2-Way Solenoid Valve

PART #	DESCRIPTION
H87A343A	2-Way Solenoid Valve Retrofit Kit - Converts from 3-way to 2-way solenoid valve. (1-Pump kit)
1L545A	2-Way Solenoid Valve for bracket mounting
87A481-STK	Din Connection Cable for the 1L545A - Connects via cable solenoid valve to control panel.
1L545B	2-Way Solenoid Valve thru backpan mounting
1L9D	Nipple, required for 1L545B solenoid valve
5L181A	Conduit Fitting Hub for 1L545B solenoid valve

H87A343A

1L545B

1L545A &
1L545A-2

5L181A

1L9D

Maintenance Video Series

Change the Reeds

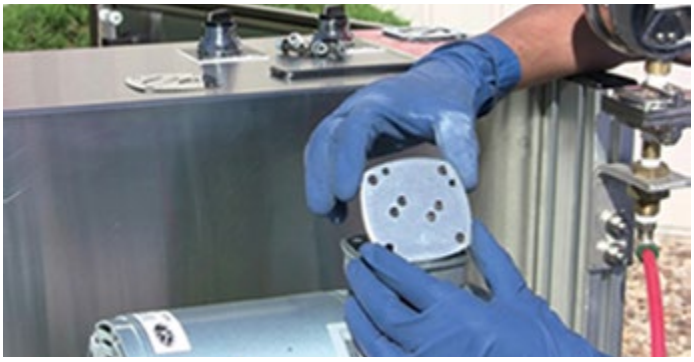

Replace the Single Mechanical Seal

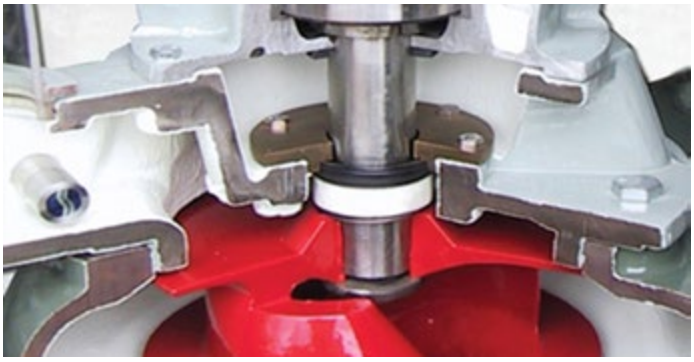

Change a Float Check Valve

Monitor your Pump Station using Gauges

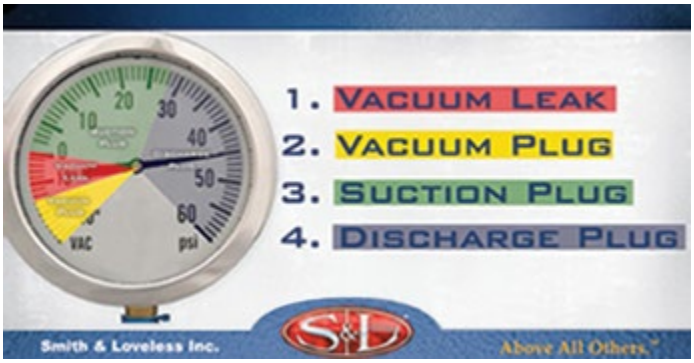

All of Smith & Loveless's products are designed for an extended life span. Certain things can shorten this lifespan and create problems. Smith & Loveless' new Maintenance Video Series video P/N: 12L318DVD-1 goes through the process of using guages to monitor your pump station, when and how to replace a single mechanical seal, changing out a float check valve, or replacing the reeds in a vacuum pump.

This DVD comes at no charge when you order impellers, vacuum pumps, gauges, float check valves, and seals.

Become a maintenance expert, order today!

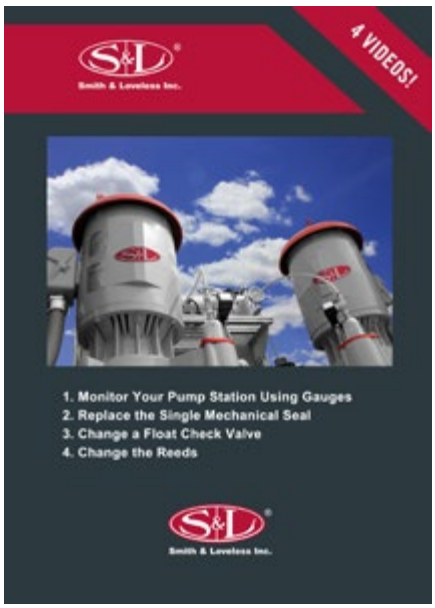

12L318DVD-1

TO ORDER, CALL **1-800-922-9048**

Controller Upgrades

QUICK SMART™
System Controls

Delivering simplified operation yet powerful pump station control, **QUICKSMART™** Station Controls provide unparalleled ability to monitor and adjust all of your pump station functions with a simple touch of the screen. A new layout makes control modifications, screen navigation and viewing of pump station status easier than ever, with screen function buttons and a status bar acccesible from each screen. Added features take station controller functionality to new levels. Like a new maintenance log feature, which displays periodic recommended operation / maintenance instructions and makes lubrication suggestions based on actual pump run times. Or improved help/ troubleshooting support and a new I/O Status screen that displays controller digital and analog I/O status.

Upgrade your pump station controls today.

FORCE MAIN SYNC™

Force Main Sync™ is designed for common force mains with multiple pumps on the common force main creating complex pumping variables.

Featured with Shade Aide™!

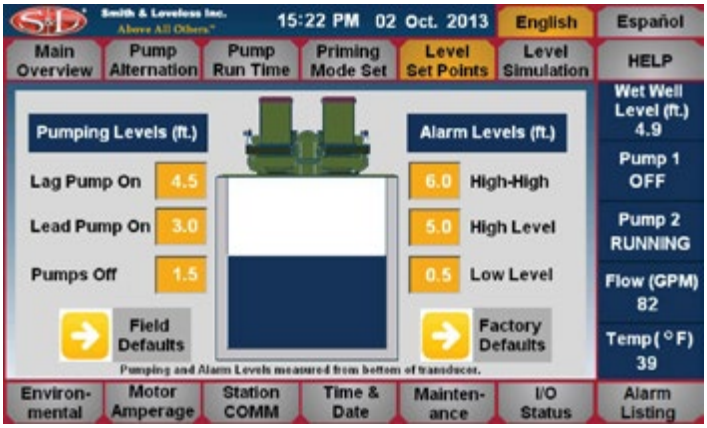

Level Set Points

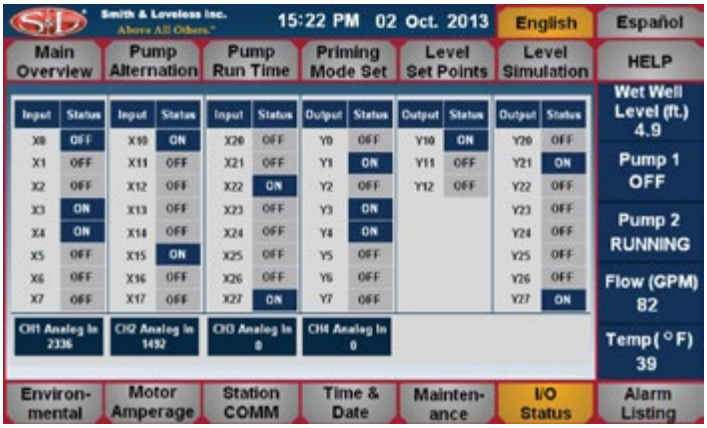

I/O Status Overview

The Electrode and Vacuum Dome Evolution

Over the years, the Smith & Loveless Vacuum Dome arrangement has changed. Depending upon which arrangement you currently have installed will vary which replacement parts you require.

ORIGINAL
2-Hole Vacuum Dome
Aluminum Electrode

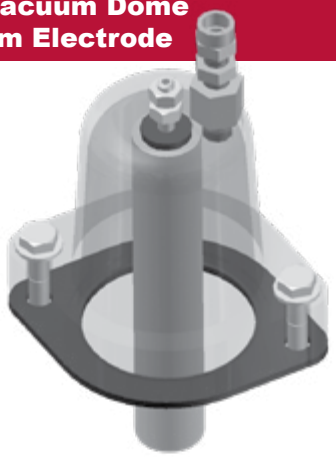

Obsolete. *Original 2-hole Vacuum Dome with aluminum electrode.*
Use PN: ***H87A329A*** *conversion kit.*

VERSION 2
1-Hole Vacuum Dome
Hollow Electrode

Obsolete. *Only certain components still available. 1-hole Vacuum Dome with hollow stainless steel electrode. Convert to solid stainless steel electrode with*
PN: ***87B309B & 87B309C****.*

VERSION 3
1-Hole Vacuum Dome
Solid Electrode

Fully supported in Parts. *1-hole Vacuum Dome with solid stainless steel electrode.*
PN: ***87B309B*** *- 5-1/4" Long Electrode*
PN: ***87B309C*** *- 6" Long Electrode*

VERSION 4
1-Hole Vacuum Dome
SONIC START® Probe

Fully supported in Parts. *1-hole Vacuum Dome with no electrode. Uses* ***SONIC START®*** *Probe.*
PN: ***87B452A*** *(Dome Assembly)*

NEWEST VERSION 5 - SONIC START® STREAMLINE™
1-Hole Vacuum Dome, SONIC START® Probe &
2-Way Solenoid Valve

H87A391J

Current Version for all Vacuum Primed Pump Station New Equipment. *1-hole Vacuum Dome with no electrode. Uses* ***SONIC START®*** *Probe and relocates larger ported 5/16" diameter orifice 2-way solenoid valve to above vacuum dome.*
PN: ***87B728*** *(Vacuum Dome Assembly with Solenoid Valve)*

TO ORDER, CALL **1-800-922-9048**

ER Relay & Electrode Evolution

4L29 Electrode Relay | **4L408 Electrode Relay** | **4L408H Electrode Relay** | **4L408J Electrode Relay** | **4L408Q Electrode Relay**

No longer available

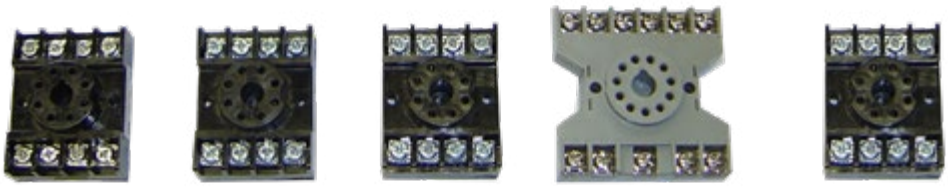

Aluminum Electrode
87A72
No longer available

Hollow Electrode
87A229A & B
No longer available

Solid Electrodes
87A285 5-1/4" long &
87A285B 6" long

NEWEST COMPONENTS!

4L264S Sonic Start® Operating Module & 4L406B Delay Timer

200 millisecond
***SONIC START®** Probe*
4L628N

STRETCHING out our X-PELLERS®

XPELLER® Non-clog impeller

We've now expanded our X-PELLER® line to include our 4", 6" and 8" impellers. Thanks to the improved X-PELLER® from Smith & Loveless, you'll spend less time dealing with clogs and more time doing whatever you want. Smith & Loveless has created a solution that is easy on the install and easy on your budget.

S&L®

Smith & Loveless Inc.

EXPANDING THE DIFFERENCE.

See the difference at www.smithandloveless.com/xpeller

Flooded Suction Non-Clog Pump Impellers

Select your Smith & Loveless Flooded Suction Non-Clog Pump Model from the SIZE-IT Chart below and determine whether you need clockwise or counterclockwise rotation. *Includes: (1) non-clog pump impeller.*

4” Pumps

PUMP MODEL	CW PART #	CCW PART #
4B2*1	60B265A	60B265B
4C2*1	60B265C	60B265D
4B2A*1	6B269A	60B269B
TURBO 4B2H	60D250	60D251
TURBO 4B2J	60D250	60D251
TURBO 4B2C	87D103	87D104
4C2A*1	60B269C	60B269D
4B3	60D43	60D1
4C3	60D44	60D23
4D3	60D129	60D193
4B4A	60D172	60D171
4C4A	60D170	60D169
4D4A	60D164	60D163
4C5	60D238	60D239
4D5	60D234	60D235

4” Pumps X-PELLER® Impellers

4B2Y*1	60B252A	60B252B
4B3Y	60B231A	60B231B
4C2Y*1	60B252C	60B252D
4C3Y	60B231C	60B231D
4D3Y	60B231E	60B231F

8” Pumps

PUMP MODEL	CW PART #	CCW PART #
8B4A PUMP	60D138	60D139
8C4A PUMP	60D120	60D119
8D4A PUMP	60D118	60D117
8B4B PUMP	60D209	60D210
8C4B PUMP	60D178	60D179
8D4B PUMP	60D150	60D151
8C4C PUMP	60D198	60D199
8D4C PUMP	60D188	60D189
8C5A PUMP	60D196	60D197
8D5A PUMP	60D180	60D181

6” Pumps

PUMP MODEL	CW PART #	CCW PART
6B3 PUMP	60D45	60D34
6C3 PUMP	60D47	60D46
6D3 PUMP	60D90	60D192
6B3A PUMP	60D203	60D202
6C3A PUMP	60D187	60D186
6D3A PUMP	60D176	60D168
6B3C PUMP	60D222	60D224
6C3C PUMP	60D221	60D223
6D3C PUMP	60D212	60D213
6B4C PUMP	60D201	60D200
6C4C PUMP	60D198	60D199
6D4C PUMP	60D188	60D189

6” Pumps X-PELLER® Impellers

6B3Y	60B204	60B209
6C3Y	60B217	60B218
6D3Y	60B219	60B220

10” Pumps

PUMP MODEL	CW PART #	CCW PART #
10C5A PUMP	60D196	60D197
10D5A PUMP	60D180	60D181
10D6 PUMP	60D155	60D156

12” Pumps

PUMP MODEL	CW PART #	CCW PART #
12D5 PUMP	60D134	60D207

SIZE-IT!

Vacuum Primed Non-Clog Pump Impellers

Select your Smith & Loveless Vacuum Primed Non-Clog Pump Model from the SIZE-IT Chart below and determine whether you need clockwise or counterclockwise rotation.

Includes: (1) non-clog pump impeller.

60D45

4" Pumps PUMP MODEL	CW PART #	CCW PART #
4B2B*1	60B265A	60B265B
TURBO 4B2C	87D103	87D104
4B2D*1	60B269A	60B269B
4B3B	60D43	60D1
4C2B*1	60B265C	60B265D
4C2D*1	60B269C	60B269D
4C3B	60D44	60D23
4D3B	60D129	60D193
4D4B	60D259	60D258
4" Pumps X-PELLER® Impellers		
4B2X*1	60B252A	60B252B
4C2X*1	60B252C	60B252D
4C3X	60B231C	60B231D
4D3X	60B231E	60B231F

6" Pumps PUMP MODEL	CW PART #	CCW PART #
6B3B PUMP	60D45	60D34
6C3B PUMP	60D47	60D46
6D3B PUMP	60D90	60D192
6" Pumps X-PELLER® Impellers		
6B3X	60B204	60B209
6C3X	60B217	60B218
6D3X	60B219	60B220

8" Pumps PUMP MODEL	CW PART #	CCW PART #
8C4D PUMP	60D178	60D179
8D4D PUMP	60D150	60D151

Impeller Bolts

Smith & Loveless' Impeller Bolts feature embedded Nylock. Each time you remove the impeller, replace the Impeller Bolt. Remember to torque impeller bolts to 150 ft/lbs. Here are the part numbers for the Impeller Bolt.

PART #	SHAFT SIZE
60A12	B-Shaft: 1-7/8"
60A12	C-Shaft: 2-1/8"
60A86	D-Shaft: 3"

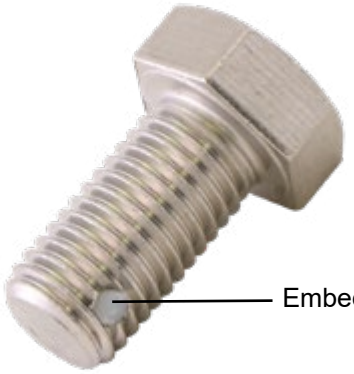

TO ORDER, CALL **1-800-922-9048**

Impeller Rotation

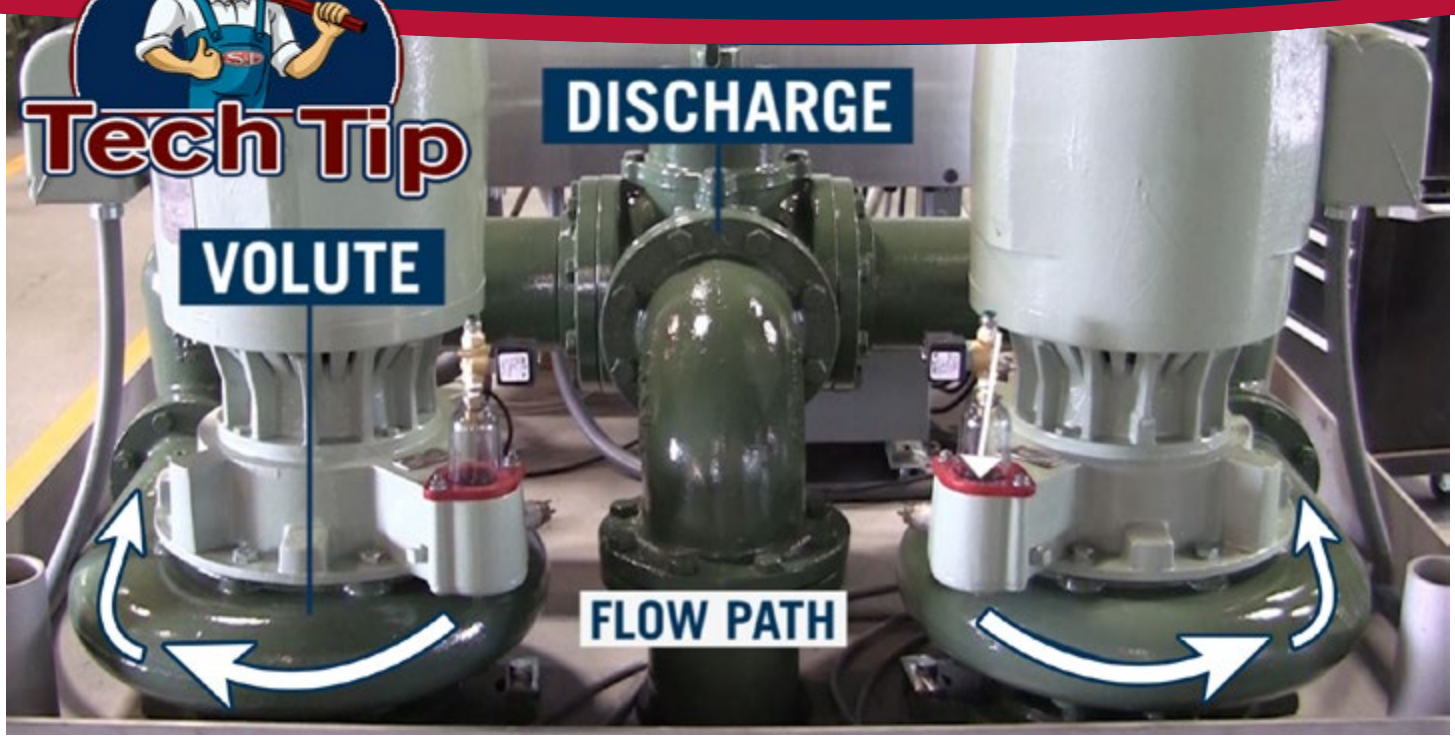

Determining impeller rotation is one of the most common questions customers ask. If you have the impeller already removed, the first thing is to make sure the “motor end” with keyway is up and the larger opening “suction end” is down.

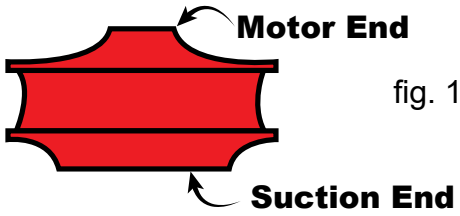

fig. 1

Then looking down on the impeller with the “motor end” up, determine which way the vanes curve. The first drawing shows a CW (Clockwise) rotation. The second drawing shows a CCW (Counter-Clockwise) rotation.

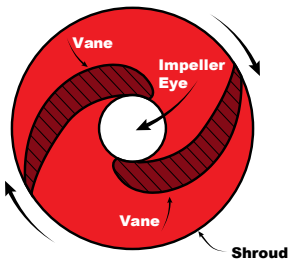

CW (Clockwise) Rotation

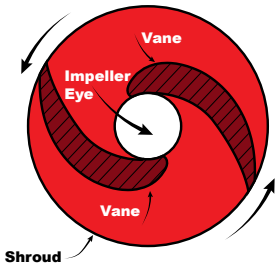

CCW (Counter-Clockwise) Rotation

If you haven’t removed the pump yet, you can still determine the rotation of the pump and impeller by looking at the equipment and how the wastewater flows through the pump.

On all Smith & Loveless Duplex Wet Well Mounted Pump Stations, there is a CW and CCW pump. The pump draws the wastewater up from the wet well and into the volute that houses the impeller. The pump then discharges the wastewater out of the volute. This can be seen in fig. 3 by following the arrows. By looking at the directional flow of the wastewater through the pump, the rotation can be determined.

In the diagram, the flow is pulled into the pump from the wet well that is located directly under the pump. The pump on the left in this diagram is the CW (Clockwise) rotation. The pump on the right in this diagram is the CCW (Counter-Clockwise) rotation. The flow always circulates around the volute first and then out through the volute discharge. Whatever rotation this flow path is will determine whether the impeller and pump are CW or CCW in rotation.

If you’d like to watch a video on determining impeller rotation, you can find it online at:

https://youtu.be/_V2d2DC_A40

Bubbler Air Compressors

9L25C

Used on all Smith & Loveless Underground Pump Stations are the Bubbler Air Compressors. We sell two replacement Bubbler Air Compressors, the 9L25C and the 9L25. The 9L25C is the smaller of the two units and the 9L25 is the larger. Otherwise, they perform the same way.

BUBBLER AIR COMPRESSORS
Includes: (1) bubbler air compressor.

PART #	DESCRIPTION
9L25C	Bubbler Air Compressor
9L25	Bubbler Air Compressor

Tech Tip

Avoid having to redrill the mounting holes. The 9L25C has 3 mounting feet and the 9L25 has 4 mounting feet. Check to see which style you already have installed.

9L25

TO ORDER, CALL **1-800-922-9048**

Vibration isolator

for the direct air bubbler compressor compressor foot

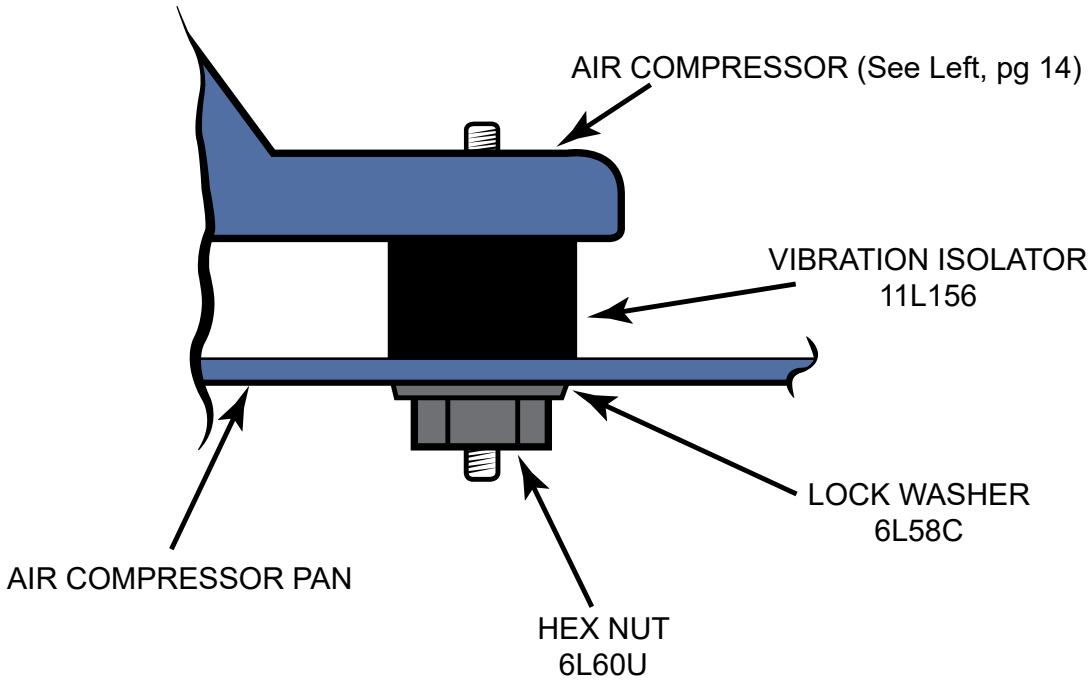

Underground Pump Station Humidistat & Dehumidifier

With Summer coming soon, humidity can quickly create problems if it is not controlled. As part of your Spring equipment review, make sure the Smith & Loveless Humidistat PN: 4L215 and Dehumidifier PN: 11L150C are functioning correctly. You easily set the level of desired humidity with the convenient dial switch and the PN: 4L215 Humidistat will operate the dehumidifier PN: 11L150C. It handles relative humidity 0 to 70%.

HUMIDISTAT & DEHUMIDIFIER

Includes: (1) humidistat and/or (1) dehumidifier

PART #	DESCRIPTION
4L215	Humidistat
11L150C	Dehumidifier

4L215

Spring-Loaded Non-Slamming Check Valves

These two 3-D drawings of the **Smith & Loveless Spring-Loaded Non-Slamming Check Valves** highlight some of their key features of P/N: 2L34A/AA and 2L35A/AA.

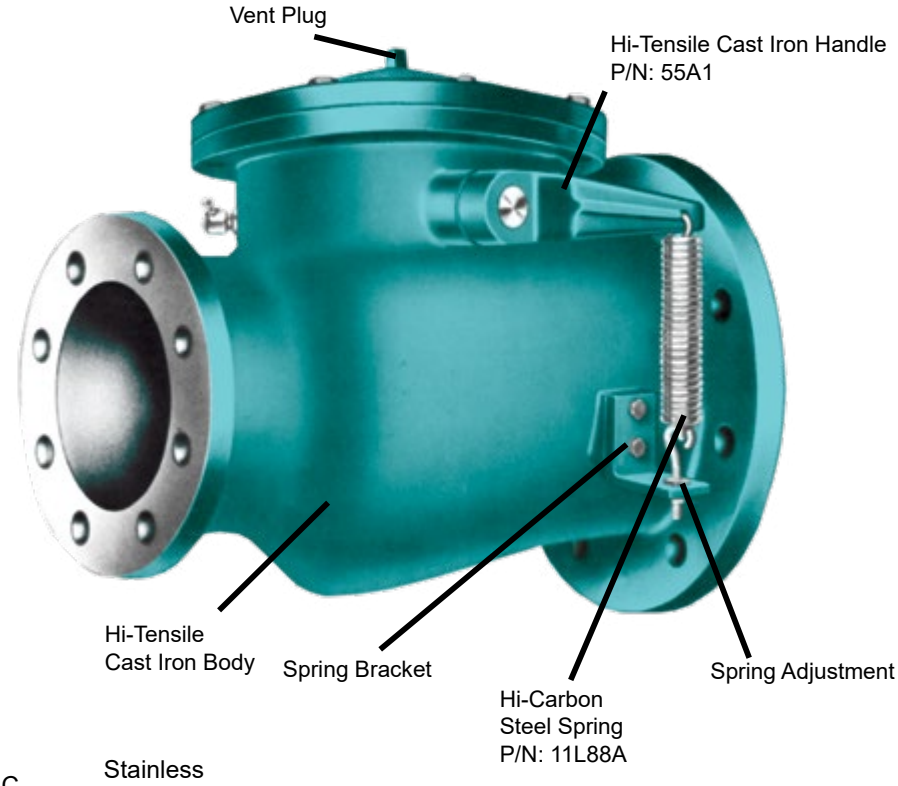

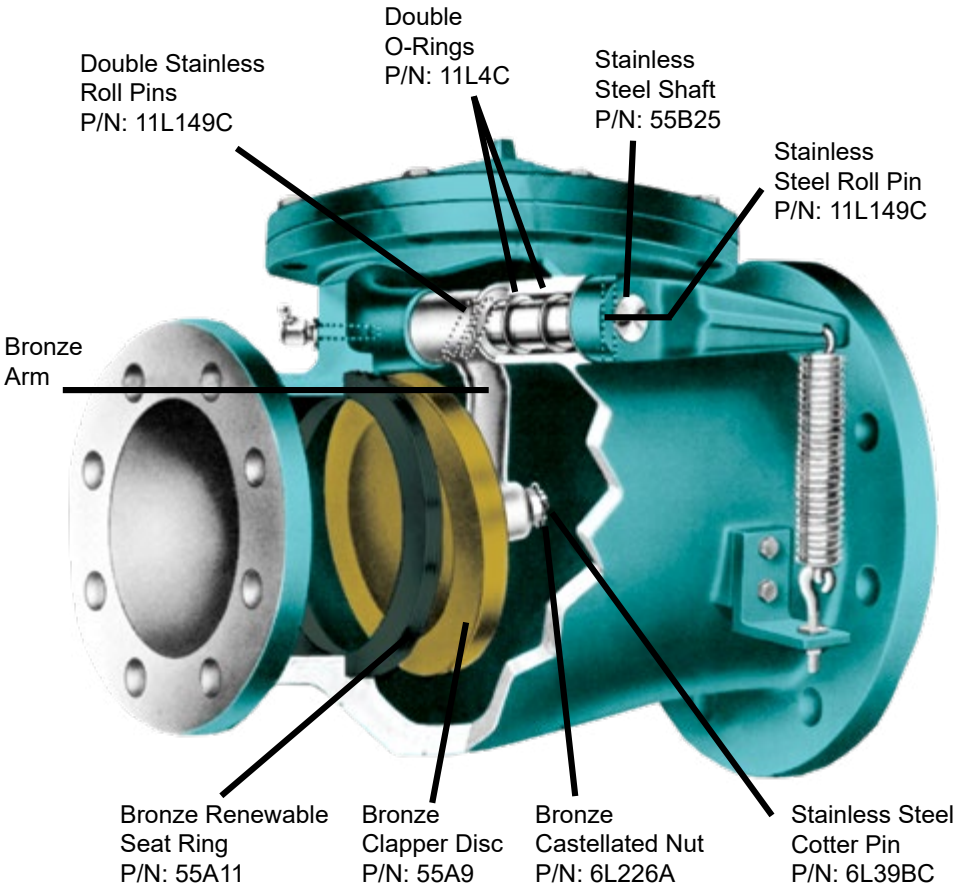

TO ORDER, CALL **1-800-922-9048**

Key Advantages

- Eliminates the need for increasing fittings — saving space, materials and labor cost.
- Spring-loaded gate, non-slamming design.
- Highest quality construction with cast iron body, bronze and stainless steel fittings.
- Lubricated dual 0-ring shaft seals for easy opening and longer service life.
- Shaft extension allows right or left hand mounting of lever and spring assembly.
- Simple design and operation — all parts accessible through cover.

SIZE-IT!

Smith & Loveless' Spring-Loaded Non-Slamming Check Valves

Dimension Drawing Keys

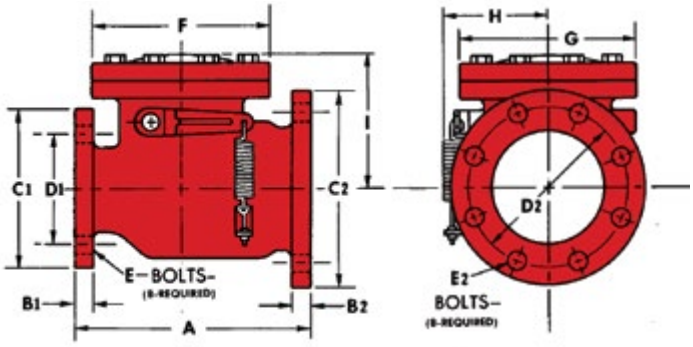

Dimension Chart

Part #	Size of Valve	RH Vs. LH	A	B_1	B_2	C_1	C_2	D_1	D_2	E_1	E_2	F	G	H	I	Wt. In Lbs.
2L34A	4" x 4"	RH	13-5/16	15/16	15/16	9	9	7-1/2	7-1/2	5/8	5/8	10	10	6-1/4	7-3/16	125
2L34AA	4" x 4"	LH	13-5/16	15/16	15/16	9	9	7-1/2	7-1/2	5/8	5/8	10	10	6-1/4	7-3/16	125
2L35A	4" x 6"	RH	13-5/16	15/16	15/16	9	11	7-1/2	9-1/2	5/8	3/4	10	13-1/2	6-1/4	7-3/16	130
2L35AA	4" x 6"	LH	13-5/16	15/16	15/16	9	11	7-1/2	9-1/2	5/8	3/4	10	13-1/2	6-1/4	7-3/16	130
2L35B	4" x 8"	RH	18-1/4	15/16	1-1/8	9	13-1/2	7-1/2	11-3/4	5/8	3/4	13-1/2	13-1/2	8-3/4	9-1/2	225
2L35BB	4" x 8"	LH	18-1/4	15/16	1-1/8	9	13-1/2	7-1/2	11-3/4	5/8	3/4	13-1/2	13-1/2	8-3/4	9-1/2	225
2L35C	5" x 8"	RH	18-1/4	15/16	1-1/8	10	13-1/2	8-1/2	11-3/4	3/4	3/4	13-1/2	13-1/2	8-3/4	9-1/2	235
2L35CC	5" x 8"	LH	18-1/4	15/16	1-1/8	10	13-1/2	8-1/2	11-3/4	3/4	3/4	13-1/2	13-1/2	8-3/4	9-1/2	235
2L35D	6" x 8"	RH	18-1/4	1	1-1/8	11	13-1/2	9-1/2	11-3/4	3/4	3/4	13-1/2	13-1/2	8-3/4	9-1/2	240
2L35DD	6" x 8"	LH	18-1/4	1	1-1/8	11	13-1/2	9-1/2	11-3/4	3/4	3/4	13-1/2	13-1/2	8-3/4	9-1/2	240

Flooded Suction Pump Seal Filter

1L485

In 1996, the Smith & Loveless Seal Filter for non-clog flooded suction pumps was changed to PN: 1L485 (seen right) in order to provide a larger filtration volume than the previous version PN: 1L371. The seal filter element surface area jumped from 1 square inch (1L371) to 6 square inches of filter area. This greatly lengthens the time between the need to clean or change out the seal water filter element. The PN: 1L485 Seal Filter is used on all of Smith & Loveless' Flooded Suction Pumps. The **PISTA**® Turbo Grit Pump, **PISTA**® Grit Pump and Smith & Loveless Underground Pump Stations feature this type of pump. No piping changes are required to convert from the PN: 1L371 to the PN: 1L485.

Includes: (1) seal filter assembly.

Complete Flooded Suction Pump Seal Filter Assembly.

PART #	DESCRIPTION
1L485	Seal Filter Assembly

1L485, 1L371 & 1L89 Parts

Smith & Loveless carries a full line of repair kits for the PN: 1L485. For the older style PN: 1L371 and PN: 1L89, Smith & Loveless still carries some of the element components. The PN: 1L485 is a direct replacement to both the PN: 1L371 and PN: 1L89 so it can be put in place easily.

1L485, 1L371 and 1L89 Repair Kits and Spare Parts

PART #	DESCRIPTION
1L485A	Filter Element Kit: incl. Bowl O-Ring & Filter Element
1L485B	Bowl Kit: incl. Bowl, Bowl O-Ring & Drain Kit
1L485C	Drain Kit: incl. Twist Drain & Drain O-Ring
1L485D	Baffle Kit: incl. Baffle, Deflector, & Bowl O-Ring

PART #	DESCRIPTION
1L371C	O-Ring
1L371E	Element
1L89E	Element

TO ORDER, CALL **1-800-922-9048**

SONIC START® STREAMLINE™

The clean and simplified **SONIC START® STREAMLINE™** Prime Sensing System relocates the solenoid valve and ***frees*** 50% of the original fitting connection points for an improved priming system. Here's the system features.

Quick Disconnect Male Fitting
PN: 1L460E
Improved with circular uniform constriction fit, eliminating tubing gouges.

SONIC START® STREAMLINE™ Vacuum Dome Assembly
PN: 87B728
Relocating the 2-way solenoid valve to on top of the vacuum dome takes sewage pump pressure off of the vacuum tubing and tubing fittings, which stops liquid and debris from going beyond the vacuum dome. This eliminates routine cleaning of the solenoid valve and the vapor filter.

SONIC START® Probe
PN: 4L628N
a new faster 200 millisecond **SONIC START®** Probe.

Delay Timer PN: 4L406B Eliminates relay races between the vacuum pump and prime sensor after power surges or power loss.

Vacuum Release Valve PN: 1L764B
Located at the volute's gauge port, in case access to the solenoid or inside of the vacuum dome is required, vacuum is released here. Assembly includes a close nipple. PN: 1L28B and a straight tee PN: 1L37B.

Vacuum Pump Piping Arrangement
PN: 87B739
No solenoid valve located here or at the control panel anymore.

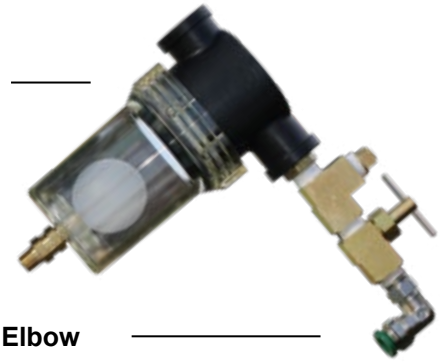

Quick Disconnect 90⁰ Elbow
PN: 1L546C
Improved with circular uniform constriction fit, eliminating tubing gouges.

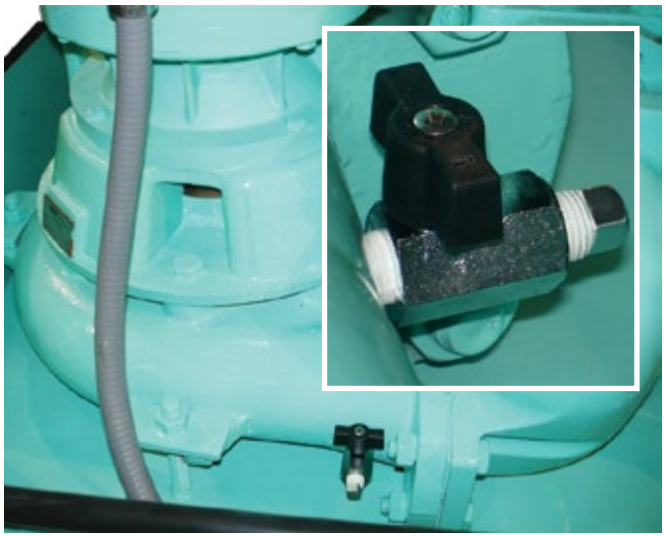

Bolt-on Top Performance by Upgrading to Smith & Loveless Rotating Assemblies.

Attention: Owners and Operators of Allis-Chalmers, Aurora, and Fairbanks-Morse vertical mounted sewage pumps.

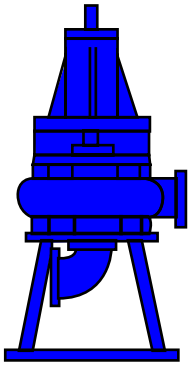

In-line Shaft pump

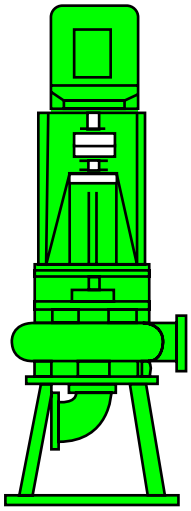

Flex-Coupled pump

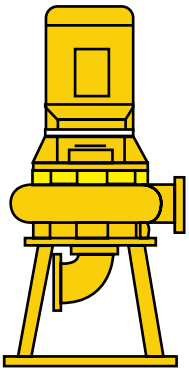

Close-Coupled pump

It's as easy as 1, 2, 3
1. Find existing pump model from chart below
2. Identify Smith & Loveless drop-In replacement
3. Relax & reap the rewards:
-Premium performance
-Low maintenance
-Less energy usage
-Reduced operating costs

Replacement Rotating Assemblies Available for:				S&L Rotating Assemblies:
Allis-Chalmers	4x4x14	Type NSWV	Model 200, 300, 400	**4D4**
Allis-Chalmers	8x6x17	Type NSWV	Model 200, 300, 400	**6D5**
Aurora Pump Co.	8Ex10	Type KU	Series	**8D5**
Aurora Pump Co.	10Ex10	Type KU	Series	**10D5**
Aurora Pump Co.	12Ex10	Type KU	Series	**12D5**
Fairbanks-Morse	4"	Fig.	5412, 5432, 5442	**4B2**
Fairbanks-Morse	4"	Fig.	5413, 5433, 5443	**4B3**
Fairbanks-Morse	5"	Fig.	5413, 5433, 5443	**6B3**

Smith & Loveless rotating assemblies will enable your pumps to give top performance in all wastewater pumping applications. Plus, low energy usage and low maintenance requirements will cut overall operating costs. S&L makes a bolt-on rotating assembly to fit each of the pumps listed on the chart. Call your Smith & Loveless representative for details.

TO ORDER, CALL **1-800-922-9048**

Technically advanced for practical performance.

Smith & Loveless pumps have many outstanding features which make them work ***for* you not *against* you.**

- The oversized shaft minimizes shaft deflection, resulting in extended seal and bearing life.
- The bronze mechanical seal housing provides the best possible heat dissipation prevents the formation of abrasive rust particles in the seal.
- The non-clog impeller with a streamlined eye will pass 3” solids.
- Custom-trimmed impeller vanes are designed for maximum efficiency. The back shroud is full diameter to prevent stringy material from winding around the shaft and the front shroud is also full diameter to prevent recirculation of pumped liquid and improve efficiency.
- Smith & Loveless’s compact design minimizes pump height, thus reducing vibration and extending seal and bearing life.

Replacement pumps available:

Fairbanks-Morse	Aurora
Cornell	Deming-Crane
Allis-Chalmers	Clow
Chicago	Hydromatic

Tired of excessive maintenance costs and down-time due to limited seal life, bearing and shaft failure, and frequent clogging? A simple economic way to give new life to your wastewater pumping system is to install high-performance, energy-efficient Smith & Loveless pump or drop-in rotating assembly.

Upgrading to Smith & Loveless quality is fast and easy whether you presently have close-coupled, flex-coupled, or in-line shaft driven pumps. The S&L rotating assembly bolts right into the existing volute casing while the Smith & Loveless complete pump bolts right onto the base - no cutting no welding, no piping changes! The installation takes just minutes, with a few simple tools and factory supplied parts. Just bolt on, connect the motor leads, and keep on pumping.

Fast and simple: Bolt on, turn on.

Call: 800.922.9048 www.smithandloveless.com

How It Works

Smith & Loveless **I-SERIES**™ Immersible Wastewater Pumps not only offer peace of mind for flood-prone pumping applications, but also the high pump efficiencies, long-term durability and the single-source reliability available exclusively from Smith & Loveless. Here's a quick step-by-step overview of how the **I-SERIES**™ Immersible Pumps by Smith & Loveless operate during flood events.

Dry Pit Begins to Flood

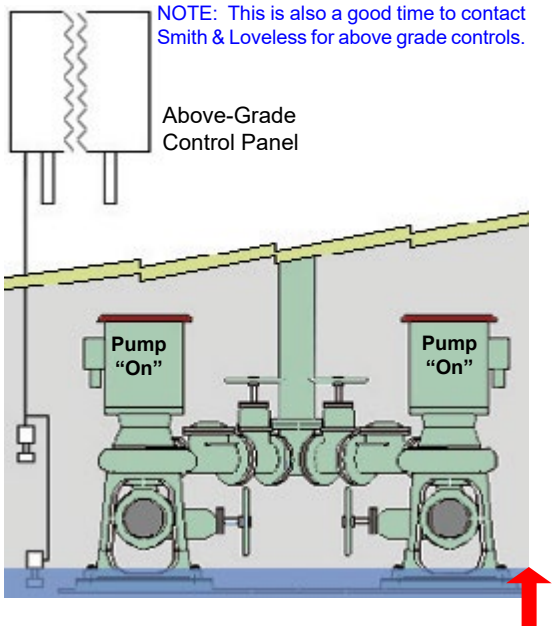

Rising water level trips a float switch, causing an alarm to signal the SCADA system. Pumps continue to run normally.

Water Level Causes Alarm Signal

Dry Pit Continues to Flood & the Pumps Shut Down

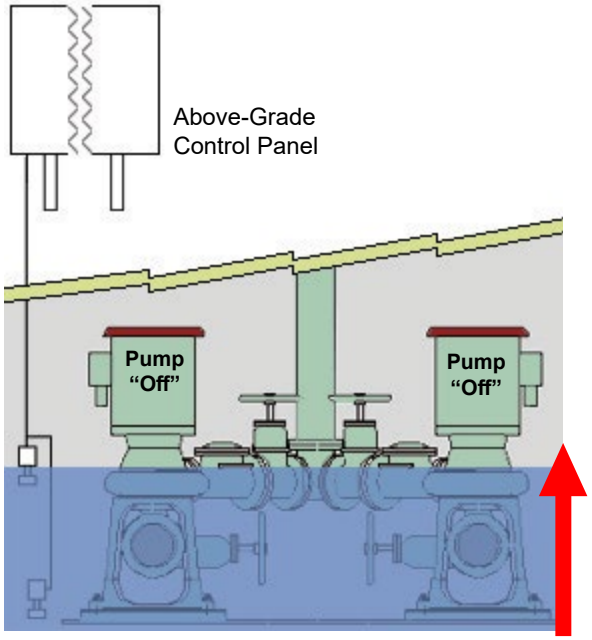

Rising water level trips second float switch, causing pumps to shut down. Smith & Loveless recommends the shutdown option because at some point, usually within 24 to 48 hours, the pump station will need to be dewatered. By using the pump shutdown option, it allows the operator to evaluate whether the cause is catastrophic, such as a collapsed suction or discharge pipe, or check valve.

Water Level Causes Pumps to Shut Down

TO ORDER, CALL **1-800-922-9048**

I-SERIES™ Immersibles

While the Pumps are immersed in the dry-pit, **I-SERIES**™ Immersible Pump special end bell seals prevent leakage into the motors for up to 3 weeks, up to 30' of water, protecting the motors from major damage.

Note: Many engineers will specify suction valving, which manually allows field technicians to use the **I-SERIES**™ pump to dewater the dry-pit. This saves manhours and additional onsite equipment costs. In addition, the industry trend is progressing toward "pump around vaults and connections," which the **I-SERIES**™ Pump supports. Consult Smith & Loveless or its local representative for additional assistance.

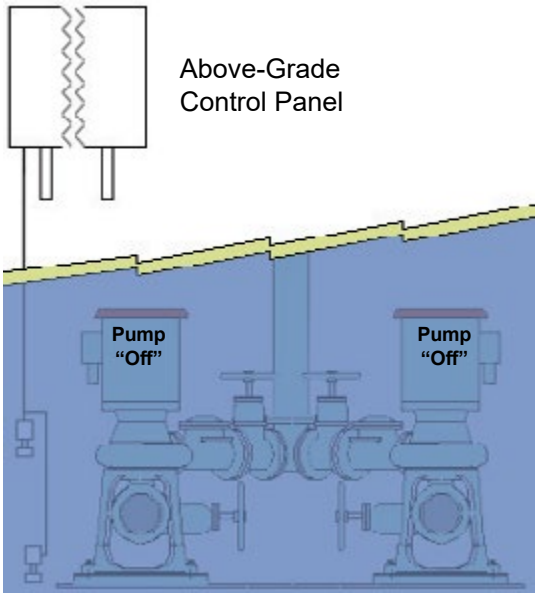

Rising water can immerse pump motors for up to 3 weeks, in 30' of water.

Another option is to run the I-SERIES™ pump under water until the pump station can be dewatered.

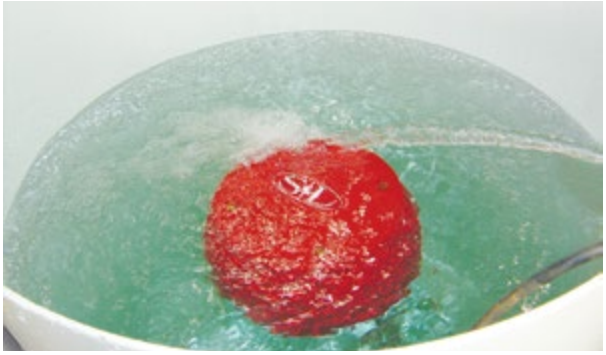

See video of the I-SERIES™ Immersible Pump operating under water at www.smithandloveless.com/iseries

The I-Series™ Runs Normally Until the Next Flood Event

The dry-pit is dewatered, leak detector checked, fan checked and all OK, the **I-SERIES**™ runs normally until the next flood event.

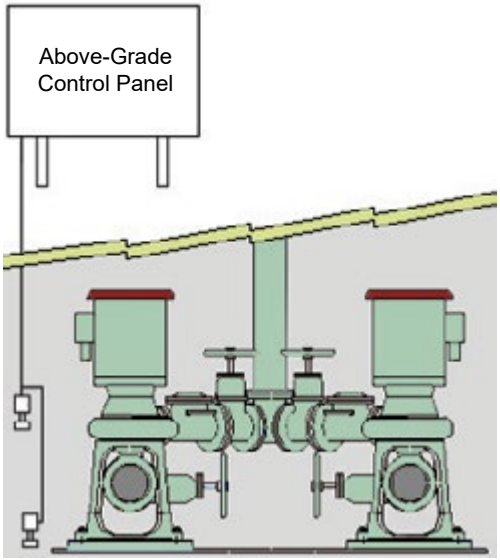

Check the Cooling Fan after a flood.

IT'S DRY! Conduit Box after submersion.

Following the flood event, check the leak detector and thermistor signals.

If the pumps were cycled during the immersion, check the motor cooling fan to see if it requires change out.

Once inspections are complete, commence with pumping.

Wafer Check Valves

Now engineered for even tougher operation, Smith & Loveless' 4" and 6" Wafer Check Valves now feature a new seat design which gives them one of the most robust seat arrangements on the market today! The 4" and 6" Wafer Check Valves are found on all of Smith & Loveless' vacuum primed pump stations.

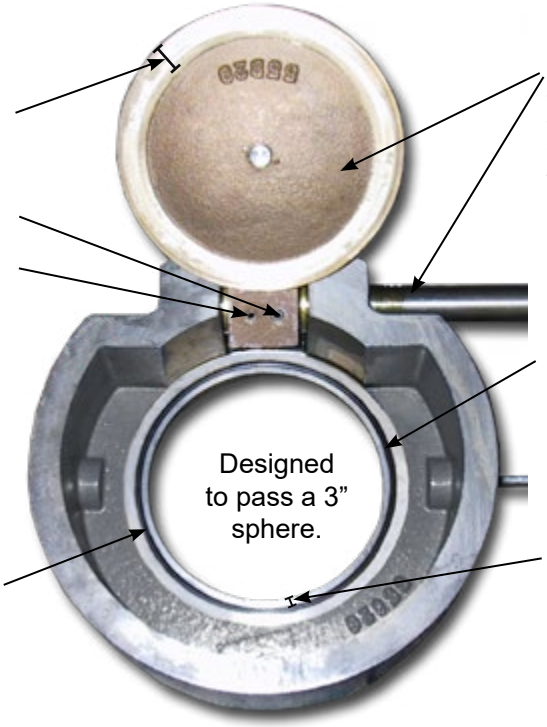

Larger diameter brass clapper provides an even larger seat area.

Arm and Shaft drilled with double pin holes to securely hold the arm and shaft in place, offering more arm and shaft strength.

New dovetail groove has a rugged gripping action that keeps the larger diameter O-Ring Seat securely in place without the use of adhesive.

Stainless steel shaft and brass clapper and arm — all built from noncorrosive materials.

New larger diameter O-Ring Seat.

1/4" of metal — a 200% increase of metal seat area between hole and O-Ring Seat groove for an even more effective and robust seal.

P/N: 2L153N, P, Q & R

PART #	SHAFT SIZE	REPLACES
2L153N	4" Left Hand Wafer Check Valve	2L153E & 2L153A
2L153P-300	4" Right Hand Wafer Check Valve	2L153F & 2L153B
2L153Q-300 or -304	6" Left Hand Wafer Check Valve	2L153L, 2L153G, 2L153C
2L153R-300 or -304	6" Right Hand Wafer Check Valve	2L153M, 2L153H, 2L153D

PART #	SHAFT SIZE
2L161E-300	8" Left Hand Wafer Check Valve
2L161F-300	8" Right Hand Wafer Check Valve
2L161G-300	10" Left Hand Wafer Check Valve
2L161H-300	10" Right Hand Wafer Check Valve
2L161J-300	12" Left Hand Wafer Check Valve
2L161K-300	12" Right Hand Wafer Check Valve

P/N: 2L161E, F, G, H, J & K

TO ORDER, CALL **1-800-922-9048**

RapidJack™

Clogging in your check valve jamming up your day? Make the process painless with the **RAPIDJACK™** easy quick clean check valve!

Smith & Loveless has revolutionized wafer check valve maintenance with the new **RAPIDJACK™**. Clearing wafer check valves of stringy materials and obstructions will now take 15 minutes or less with the new **RAPIDJACK™**.

Today's consumer products promote flushing more and more things down the toilet…this is causing clogs. And Operators know that unclogging a valve can be quite a messy, labor-intensive process.

The **RAPIDJACK™** solves most of these issues, allowing you to get back to pumping faster, with a simple three-step process.... remove, clean and reinstall. This is possible thanks to the improved design that maintains the smaller lay length of a wafer check valve while keeping the valve body in the piping during maintenance, like larger full body check valves.

Designed for quick removal, just 4 bolts allow the clapper system to be removed while the **RAPIDJACK™** valve body remains in the piping. Simply remove the obstruction, reinsert the **RAPIDJACK™** clapper system and the four bolts and go!

Smith & Loveless has done what no other company has been able to engineer, the revolutionary new **RAPIDJACK™** wafer check valve.

Just four easy steps to quickly clean your **RAPIDJACK™** check valve.

1. Remove four bolts & one spring.

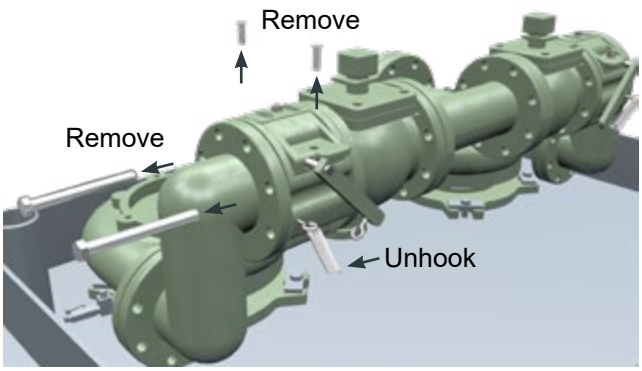

2. Lift the clapper system of the **RAPIDJACK™** check valve, remove debris.

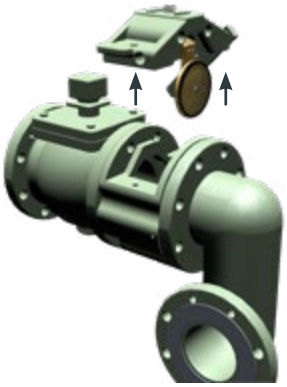

3. Reinstall clapper system, bolts, & spring.

4. Get back to pumping.

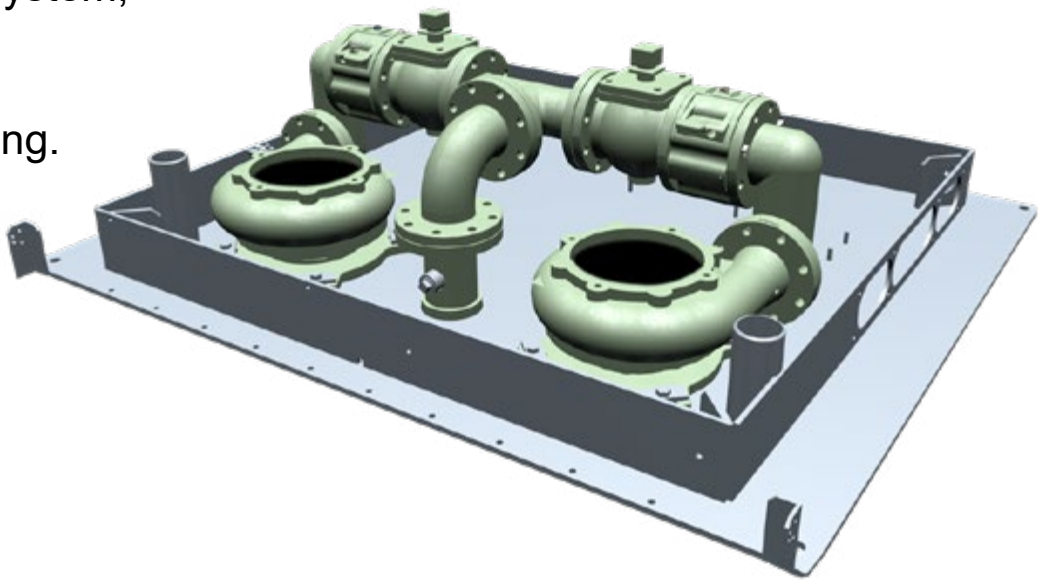

TO ORDER, CALL **1-800-922-9048**

How to get the RAPIDJACK™

4 RAPIDJACK™ Buying options

Smith & Loveless has developed four options for cities to select from to add the new **RAPIDJACK™** so that everyone has the opportunity to upgrade.

Option 1: Part

The **RAPIDJACK™** can be purchased as a standalone part that inserts into new piping layouts or can replace valves measuring 5” lay length.

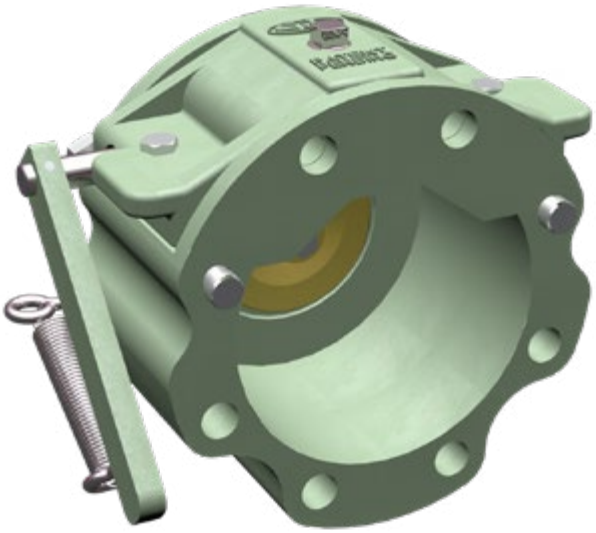

Must have space for a 5” lay length.

Option 2: Piping Skid

Many Smith & Loveless pump stations require a new piping skid to insert the **RAPIDJACK™** because the lay length of the **RAPIDJACK™** is a little more than a standard wafer check valve. Smith & Loveless can review each pump station’s piping layout and determine what piping modifications are required. In many cases two spool pieces, two **RAPIDJACK™** check valves, and a 3-way plug valve will be required.

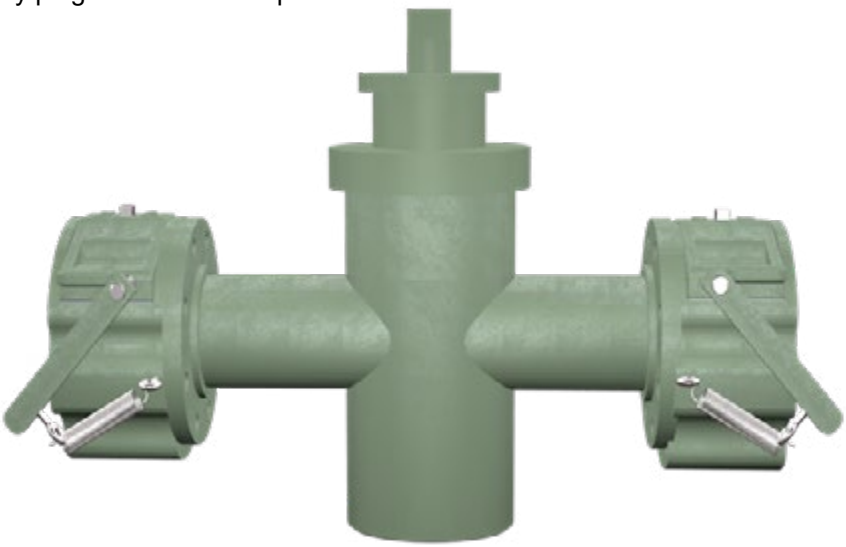

Option 3: SST Baseplate/Piping Upgrade

Many Smith & Loveless pump stations have been in service more than 25 years. With time, wear occurs. By upgrading to the SST Baseplate/Piping option that features the **RAPIDJACK™** check valve, cities can reuse rotating assemblies and control panels and have an upgraded pump station with the latest features for a cost effective price. This option features the SST **DURO-LAST™** baseplate featuring a 25-year warranty. Additionally, this is available in the **EVERLAST™**'s 1-piece and 2-piece hood designs, with additional features that include the Pump Failure Alarm, Hood Lift Assist (if the one piece hood is selected), wet well Cord manager, 2 new vacuum pumps on raised shelf, 2-piece manway to the wet well entrance, and **RAPIDJACK™**.

Option 4: EVERLAST™ Pump Station with RAPIDJACK™

The premier option is a new **EVERLAST™** Pump Station with the **RAPIDJACK™**. Engineered for flexibility, every **EVERLAST™** pump station's piping arrangement has the room to add the **RAPIDJACK™** when originally purchased or purchased at a later date.

EVERLAST™

TO ORDER, CALL **1-800-922-9048**

Gaskets, Quad Rings, & Bolts

Seal Housing Gasket

Quad Ring

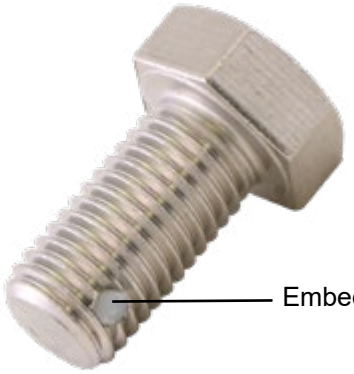

Each time the mechanical seal is replaced, Smith & Loveless recommends the Seal Housing Gasket or Quad Ring also be replaced.

PARTS TIP: The older Seal Housing has a flat surface and uses the flat Gasket. The newer Seal Housing has a groove and it can use either the flat Gasket or the Quad Ring.

GASKET PART #	QUAD RING PART #	SHAFT SIZE
60A11	60A110	B-Shaft:1-7/8”
60A17	60A111	C-Shaft: 2-1/8”
60A84	60A112	D-Shaft: 3”

Impeller Bolts

Smith & Loveless’ Impeller Bolts feature embedded Nylock. Each time you remove the impeller, replace the Impeller Bolt. Remember to torque impeller bolts to 150 ft/lbs. Here are the part numbers for the Impeller Bolt.

PART #	SHAFT SIZE
60A12	B-Shaft: 1-7/8”
60A12	C-Shaft: 2-1/8”
60A86	D-Shaft: 3”

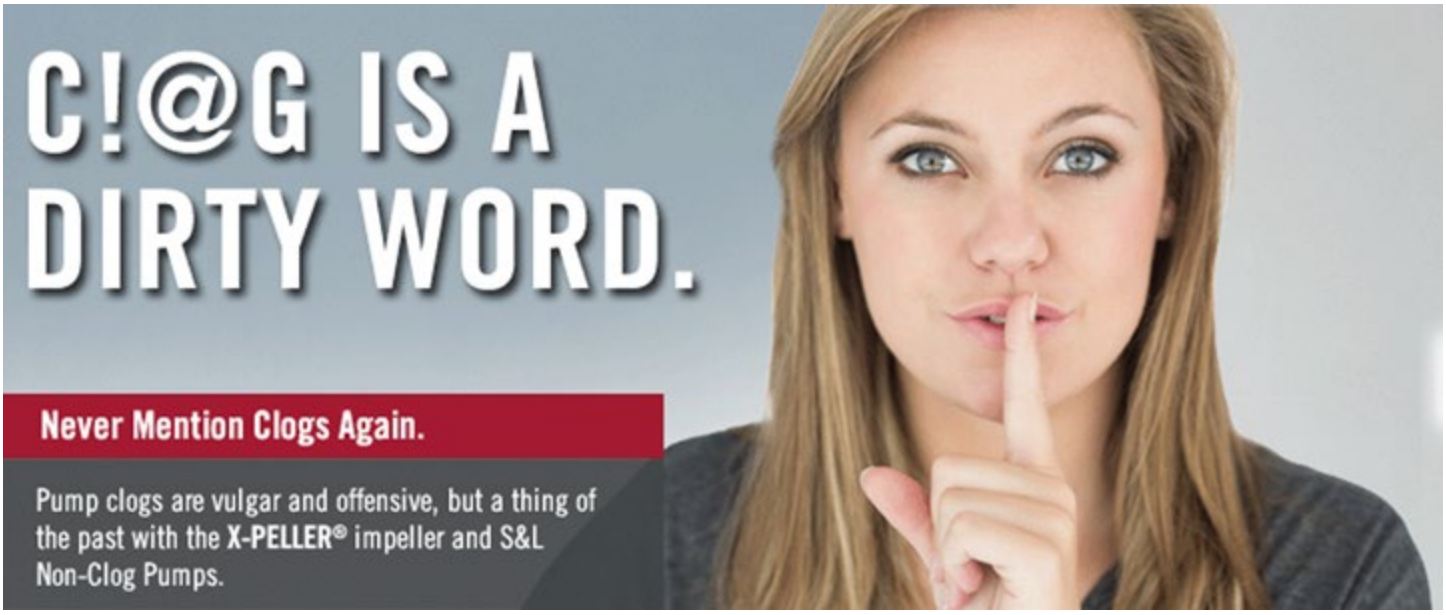

1L780C

Combination PSI Air/Vacuum Gauge with Diaphragm

"What's the difference?" you ask between this new combination air/vacuum gauge and the older style gauge? The new combination air/vacuum gauge has the diaphragm already built-in, versus being sold separately with the old style gauge. All of the new gauges shown below only come glycerin filled.

No major changes are necessary to convert to the new style gauge. All you need to do is take off the existing diaphragm and thread the new gauge into place.

1L780A-F Combo Air/Vac Gauge with 3 ½" diameter gauge face. (Measures Inches of Mercury & PSI)

PART #	DESCRIPTION
1L780A	0-30" HG, 0-15 PSI, Handles up to 25' TDH
1L780B	0-30" HG, 0-30 PSI, Handles 26'-50' TDH
1L780C	0-30" HG, 0-60 PSI, Handles 51'-90' TDH
1L780D	0-30" HG, 0-100 PSI, Handles 91'-150' TDH
1L780E	0-30" HG, 0-150 PSI, Handles 151'-225' TDH
1L780F	0-30" HG, 0-300 PSI, Handles 226'-500' TDH

Volute Gaskets

Each time the rotating assembly is taken apart, install a new volute gasket to increase the life span of your pump.

Vacuum Priming Pump Volute Gaskets	
PART #	**PUMP SIZE**
60A26	4B2B, 4B2C, 4B2D, 4C2B, 4C2D, 4B2X, 4C2X
60A28	4B3B, 4C3B, 4D3B, 6B3B, 6C3B, 6D3B

Vacuum Priming Pump Volute Gaskets	
PART #	**PUMP SIZE**
60A88	8C4D, 8D4D
60A106B	4D4B

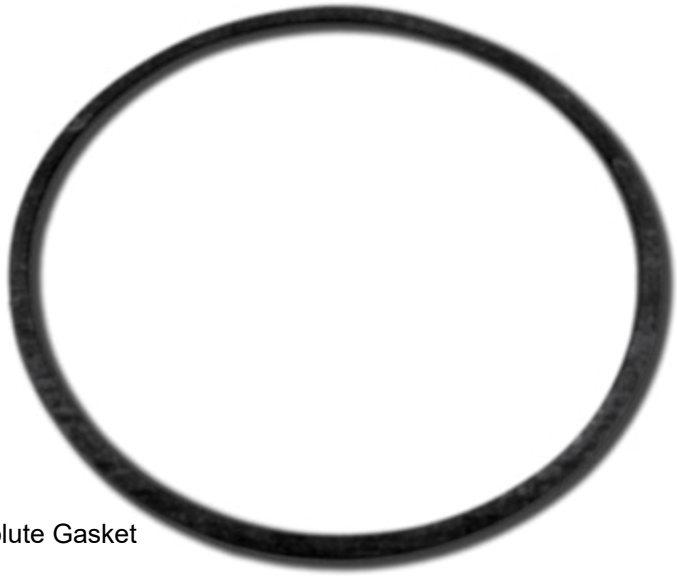

Volute Gasket

TO ORDER, CALL **1-800-922-9048**

Continuous Hinge

If your hinges are starting to tear loose or have already torn loose from the lip of the fiberglass hood, you can now fix it without having to buy an entirely new hood. The new **Continuous Hinge/ Backing Bar Retrofit Kit** (seen above) installs right over the old holes - dramatically extending the life of your hood.

Hood Lift Assist Kit

Opening your Classic Pump Station hood just got easier with the new Hood Lift Assist by Smith & Loveless, specially designed for the insulated and non-insulated single piece Smith & Loveless above grade pump station hood.

The Hood Lift Assist Kit features two (2) Gas Shocks and two (2) patent-pending Gas Shock Pivot Assemblies that extend the hood opening to an amazing 85 degrees* in most installations. Without this patented Gas Shock Pivot Assembly, you only get a 45 degree opening.

All you need to know are the hood & side plate dimensions and weight of your station hood. Order your Hood Lift Assist Retrofit Kit today!

** In a limited number of installations, the bracket will prevent the hood from opening the full 85 degrees.*

You may also want to upgrade the hinge kit of your Classic Hood.

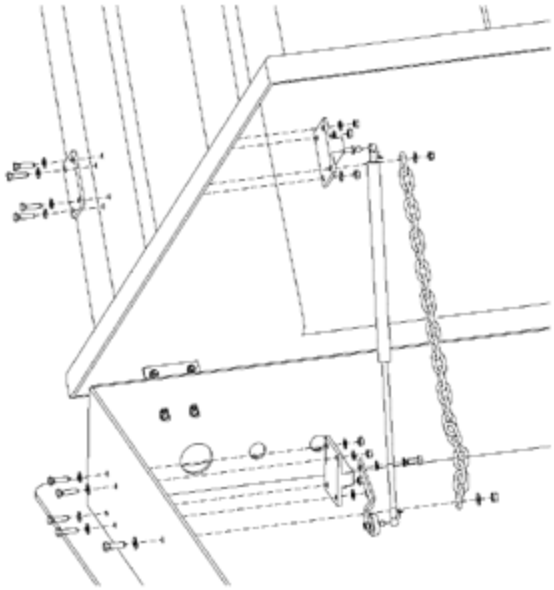

The Anode Test Box

The **Smith & Loveless Anode Test Box** was designed to monitor the current flow in each Sacrificial Anode surrounding the buried pump station. The amount of current flowing in the anodes depends on the condition of the anode. The flow of current is also effected by the electrical ground at the service pole.

The S&L Anode Test Box provides a single measuring point to monitor the current flow and subsequent amount of anode migration. S&L's Anode Test Box works well with not only Smith & Loveless equipment, but also on all underground steel structures such as water booster pump stations, valve vaults, and pump stations. See the sizing information below.

Includes: (1) Anode Test Box, Minimum (2) Sacrificial Anode Packs (quantity depends upon equipment selection seen in the table).

Circular Steel Structures: Recessed Wet Well Mounted Pump Stations, Custom Series & DUO-DUCT® Pump Stations.

Pump Station Size	Number of Anodes	Conduit Size
7'-0" Diameter	2	3/4"
8'-0" Diameter	2	3/4"
8'-6" Diameter	2	3/4"
9'-9" Diameter	3	3/4"
10'-6" Diameter	3	1"
11'-6" Diameter	3	1"

Fully Buried Steel Structures: CAPSULAR® Pump Stations

PUMP STATION SIZE	Number of Anodes	Conduit Size
9'-9" Width X 21'-0" Length	4	1-1/4"
9'-9" Width X 23'-0" Length	5	1-1/4"
9'-9" Width X 27'-0" Length	6	1-1/4"
9'-9" Width X 31'-0" Length	7	1-1/4"
9'-9" Width X 34'-0" Length	8	1-1/4"

CORROSION BLOCKER: Sacrificial Anode Pack

Stop corrosion in its tracks with the **Smith & Loveless Sacrificial Anode Pack.** This magnesium-type 17 pound pack includes a 30 foot copper lead wire that attaches to the structure that is being protected from corrosion.

This sacrificial anode pack is used for corrosion protection on all buried pump stations and Recessed Wet Well Mounted Pump Stations, along with any wastewater treatment plant or water treatment plant buried in the ground. The sacrificial anode significantly extends the life of the exposed metal by slowing the corrosion process.

The S&L PN: 12L8 Sacrificial Anode Pack can be tied directly into your Smith & Loveless Anode Test Box to monitor anode migration.
If you don't know when your sacrificial anode pack was last updated, order and install one today.

Sacrificial Anode Pack.

PART#	DESCRIPTION
12L8	Sacrificial Anode Pack

TO ORDER, CALL **1-800-922-9048**

Double Mechanical Seal Replacement Parts Kit

Just like its single seal little brother, the Double Mechanical Seal was designed to have the longest seal life of any in the industry. Used on all Smith & Loveless flooded suction pumps found on Custom Series, and **CAPSULAR®** Underground Pump Stations, it comes in three sizes, which is dependent upon the shaft size.

Double Mechanical Seal Parts Kit
Includes: (2) carbons, (2) ceramics, (1) spring, o-rings & quad rings.

PART #	SHAFT SIZE
H60A119	B-Shaft: 1-7/8”
H60A120	C-Shaft: 2-1/8”
H60A121	D-Shaft: 3”

Pump Failure Alarm

The Pump Failure Alarm is a cost effective way to keep you advised. This kit includes everything for a 2-Pump Station

H87A376

No matter what angle your check valve is, the Smith & Loveless Pump Failure Alarm bolts on and adjusts to that angle. It senses even the smallest check valve arm deflections, preventing many false pump failure alarms.

Pump Failure Alarm Retrofit Kit

Part #	Description
H87A376	S&L Pump Failure Alarm 2-pump Retrofit Kit for Relay Logic Panels (includes LH & RH sensors)
H87A383A	Right-hand S&L Pump Failure Alarm Retrofit Kit for Relay Logic Panels
H87A383B	Left-hand S&L Pump Failure Alarm Retrofit Kit for Relay Logic Panels

Original Parts

The new PN: 1L443H Smith & Loveless **Float Check Valve** diameter and length were completely changed in 1999 to the new design PN: 1L443H for better overall **Float Check Valve** Assembly performance. The **Float Check Valve** is used on all Smith & Loveless vacuum primed pumps.

Complete Float Check Valve Assembly

PART #	DESCRIPTION
1L443H	Float Check Valve Assembly

1L443H

1L443H Spare Parts

Smith & Loveless carries a full line of spare parts for the PN: 1L443H Float Check Valve, put into use in 1999.

1L443H Float Check Valve Spare Parts

PART #	DESCRIPTION
1L443HD	Body
1L443HA	Ball Seat
1L443B	1-1/2” Diameter Float Ball
1L443HB	O-Ring
1L443HC	Bowl Assembly
1L333	Check Valve (Install with arrow pointing down)

1L443G Spare Parts

Even though this Float Check Valve assembly was used only from 1997 to 1999, Smith & Loveless still carries a full line of spare parts for it.

1L443 Float Check Valve Spare Parts

PART #	DESCRIPTION
1L443A	Ball Seat
1L443B	1-1/2” Diameter Float Ball
1L443E	O-Ring (Goes around inside lip of the bowl)
1L443F	Bowl Assembly
1L333	Check Valve (Install with arrow pointing down)

1L443 Spare Parts

Used from 1995 to 1997, Smith & Loveless Float Check Valve PN: 1L443 still has some spare parts available for purchase.

1L443 Float Check Valve Spare Parts

PART #	DESCRIPTION
1L443B	1-1/2” Diameter Float Ball
1L443C	O-Ring (Goes around inside lip of the bowl)
1L333	Check Valve (Install with arrow pointing down)

TO ORDER, CALL **1-800-922-9048**

87A76 Spare Parts

Used from 1970 to 1995, Smith & Loveless Float Check Valve PN: 87A76 still has some spare parts available for purchase.

87A76 Float Check Valve Spare Parts

PART #	DESCRIPTION
1L443B	1-1/2" Diameter Float Ball
1L410C	O-Ring (Goes around inside lip of the bowl)
1L410D	Bowl (Not Shown)
1L410H	Bowl Insert
1L333	Check Valve (Install with arrow pointing down)

Normally Open Float Switch

Are your floats measuring the level in your wet well consistently or is it time to replace your floats? Made of Polyethylene materials, the "Blue" **Normally Open Float Switch 4L291A** is the most common float sold by S&L and is typically used for high water alarms and non-alarm conditions in the wet well that signal your S&L pump to start or stop pumping.

Includes: (1) normally open float switch.

4L291A

NORMALLY OPEN FLOAT SWITCH

PART #	DESCRIPTION
4L291A	Normally Open Float Switch

Normally Closed Float Switch

Made of Polyethylene materials, the "Red" **Normally Closed Float Switch 4L291B** is typically used for low water alarms.

Includes: (1) normally closed float switch.

4L291B

NORMALLY OPEN FLOAT SWITCH

PART #	DESCRIPTION
4L291B	Normally Closed Float Switch

Pump Schools 2018

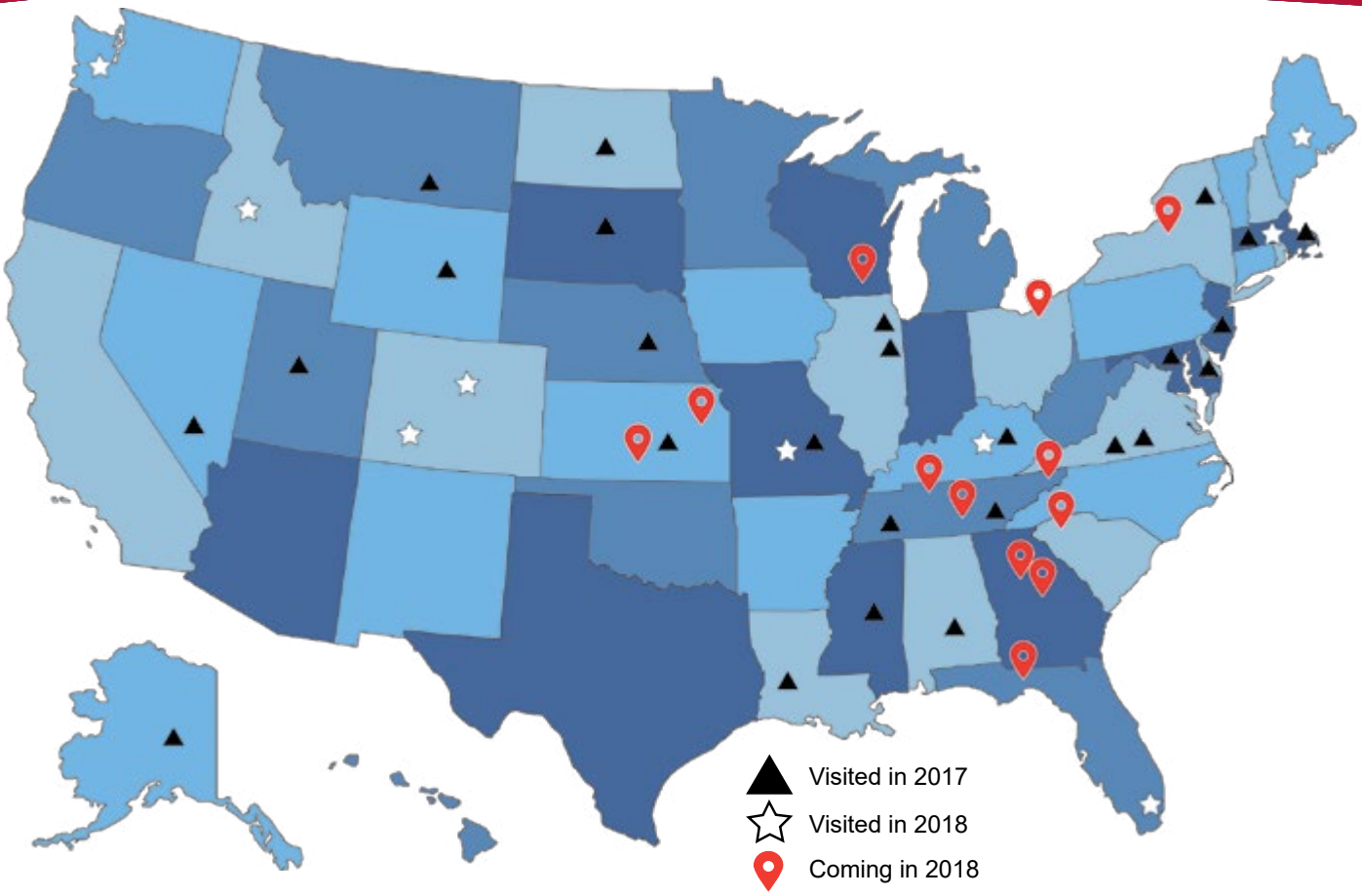

Coming Pump School Dates

Macon, GA - 05/22/2018	**Canastota, NY** - 07/10/2018
Lawrenceville, GA - 05/24/2018	**Medina, OH** - 07/26/2018
Greeneville, TN - 06/05/2018	**Lawrence, KS** - 07/31/2018
Greer, SC - 06/07/2018	**Clarksville, TN** - 08/14/2018
Tallahassee, FL - 06/14/2018	**Murfreesboro, TN** - 08/16/2018 Registration through TN.gov
Wichita, KS - 06/26/2018	**Whitewater, WI** - 08/29/2018

Check out:

smithandloveless.com/pumpschools

for the most current information and to sign up.

TO ORDER, CALL **1-800-922-9048**

Save Money!

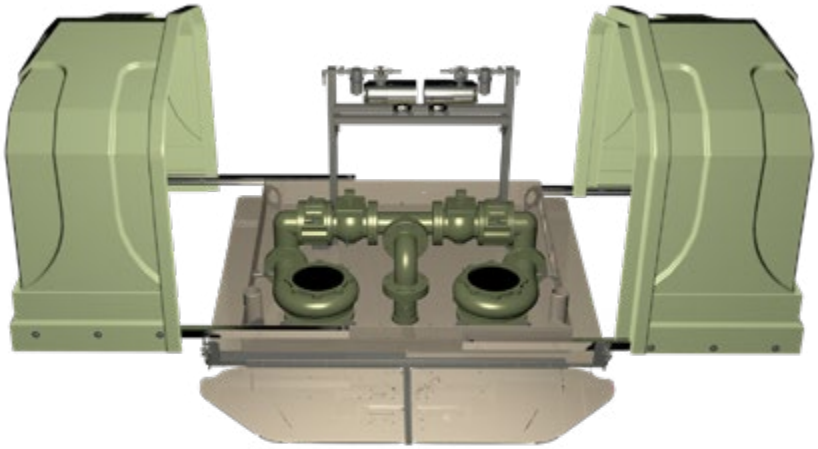

You'll Retire Before it Does

EVERLAST™ Baseplate Conversion

The **EVERLAST™** Baseplate Conversion comes fully assembled to the job site with just the two rotating assemblies and controls being reused.

Within one day, the old pump station can be removed from the wet well, the Rotating Assemblies and Controls moved from the existing pump station to the new **EVERLAST™** Baseplate Conversion, and then you attach the suction piping and lower everything back into place. It's that easy and you save money. The **EVERLAST™** Baseplate Conversion comes with:

- **DURO-LAST™** SST Baseplate with 25-Year Warranty
- NEW **RAPIDJACK™** Wafer Check Valves
- NEW **EVERLAST™** Pump Station Piping to the Volute
- Vacuum Priming Shelf with 2 new Vacuum Pumps
- Pump Failure Alarms
- **SONIC START® STREAMLINE™** Priming System
- Easy Lift & Tilt Hood or 2-piece Rolling Hood depending upon model
- Easy Split Entry Access to the Wet Well
- Convenient Wet Well Float/Transducer Access Hatch
- Blower and Ventilation Installed on the Hood

EVERLAST™

LIMITED TIME OFFER!

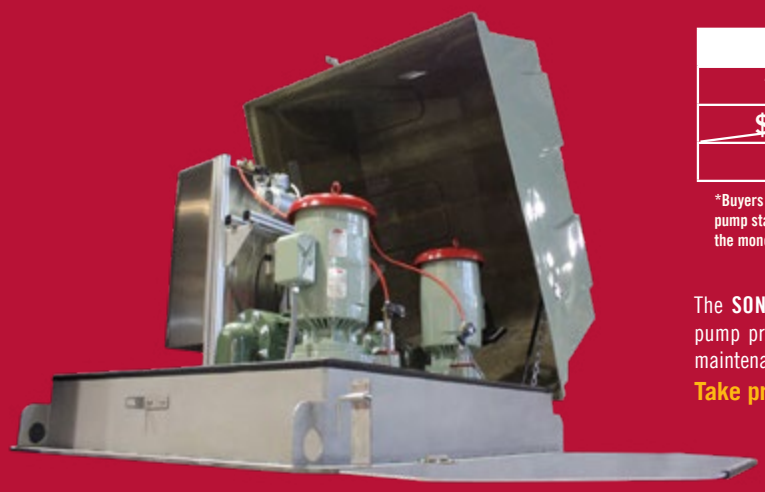

While Supplies Last!

Drastically Reduce Your
Vacuum Priming Maintenance
with the NEW
SONIC START® STREAMLINE™
Vacuum Priming System Kit for pump stations

PN: H87A391J	
1 Upgrade Kit	**2 Upgrade Kits**
~~$1063.90 MSRP~~	~~$2127.80 MSRP~~
***$669.00**	***$1338.00**

*Buyers have 60 days from date of shipment of the SONIC START® STREAMLINE™ kit for pump station to return the item(s). If they are not satisfied, Smith & Loveless will refund the money. Buyers are responsible for shipping and handling costs.

The **SONIC START® STREAMLINE™** offers the best in state-of-the-art pump prime sensing technology and provides customers with the lowest maintenance and longest lifecycle pump station part in the marketplace today.
Take pride in your pump station.

SONIC START® STREAMLINE™

Smith & Loveless Inc.

CALL 1.800.922.9048
VISIT SmithandLoveless.com